导电塑料电位器 Conductive Plastic Potentiometer

SOUNDWELL®

Integrated module, sensor, encoder, potentiometer, switch customization manufacturer.

MODEL:WDD35D4

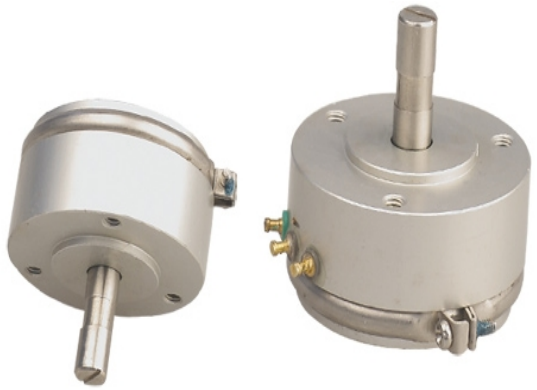

Feature：

- Precision linear
- Long mechanical life
- High resolution
- Small dynamic noise
- Convenient and reliable installation

Standard Dimensions

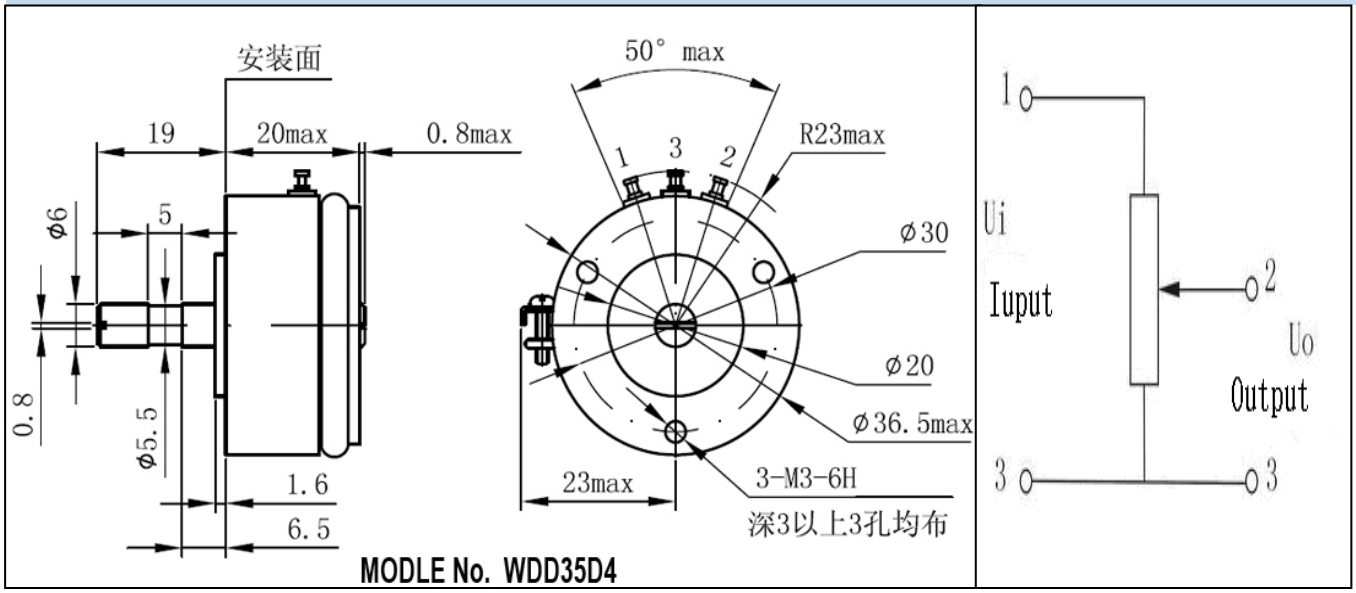

General Specifications

Electrical		Mechanical	
Standard Resistance	1KΩ、2KΩ、3KΩ、5KΩ、10KΩ	Mechanical Travel	360°（endless）
Resistance Tolerance	±15%	Starting Torque	≤$10*10^{-4}$N.M
Independent Linearity	0.1%、0.2%、0.3%、0.5%、1%	**Environmental**	
Electrical Travel	345°±2°	Life Expectancy	$50*10^{6}$cycle
Power Rating	2W（70℃）	Operating	—55℃~+125℃
Resist.TemperatureCoefficient	≤±0.04%/℃	Vibration	15G 2000Hz
Insulation Resistance	≥1000MΩ（500VD.C）	Shock	50G 11ms
Dielectric Stregth	1000V（AC.RMS)1min		
Output smoothness	≤±0.1%		

Special Specifications Available

Shaft Length,Diameter,stopper,special electrical travel,Special machining on the shaft.